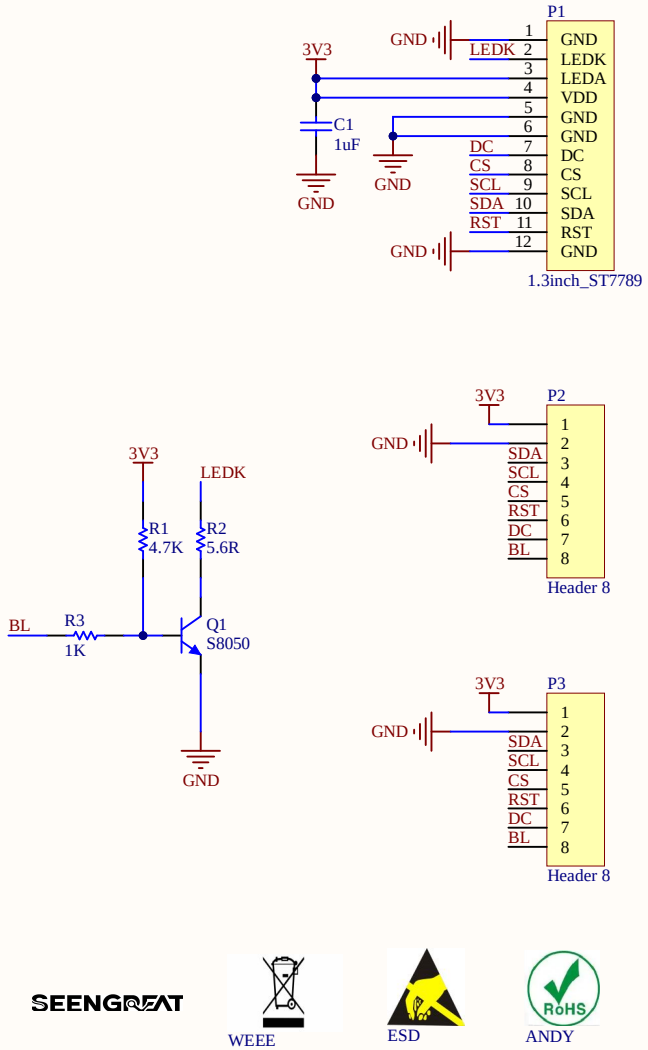
P1
GND
LEDK
3V3
C1
1uF
GND
GND
DC
CS
SCL
SDA
RST
GND
1 GND
2 LEDK
3 LEDA
4 VDD
5 GND
6 GND
7 DC
8 CS
9 SCL
10 SDA
11 RST
12 GND
1.3inch_ST7789
3V3
LEDK
R1
4.7K
R2
5.6R
BL
R3
1K
Q1
S8050
GND
3V3
P2
GND
SDA
SCL
CS
RST
DC
BL
1
2
3
4
5
6
7
8
Header 8
3V3
P3
GND
SDA
SCL
CS
RST
DC
BL
1
2
3
4
5
6
7
8
Header 8
SEENGREAT
WEEE
ESD
RoHS
ANDY